CAUTION: DISCONNECT ELECTRIC CURRENT BEFORE SERVICING

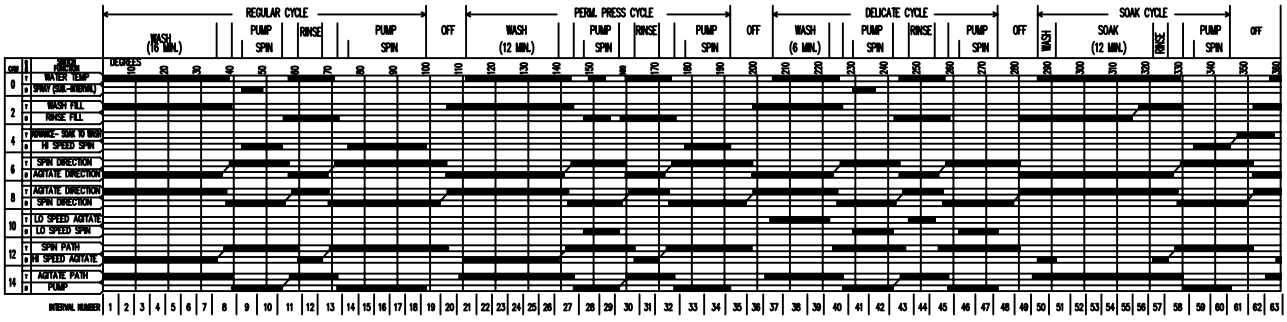

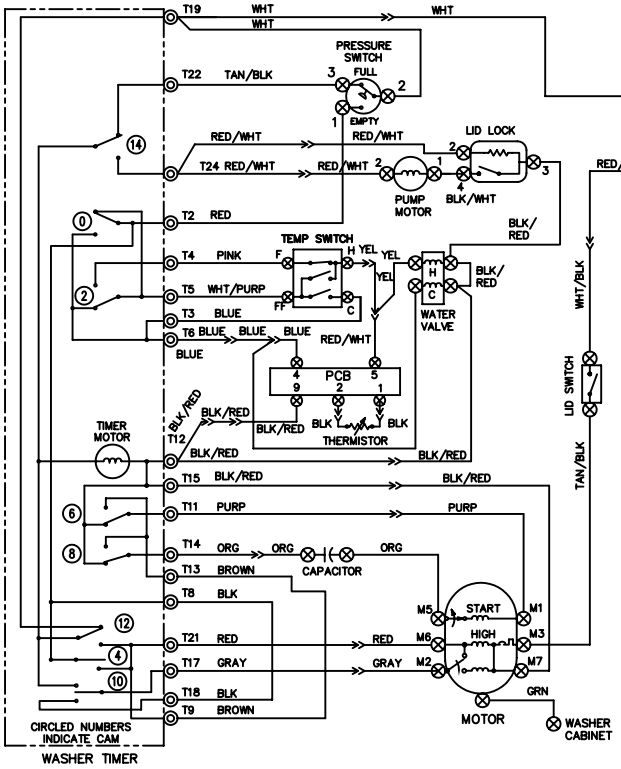

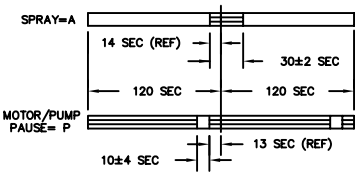

DETAIL FOR SPRAY SUBINTERVAL AND PAUSE FOR MOTOR AND PUMP CONTROL CIRCUITS.

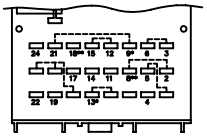

TIMER PLUG-MALE (END VIEW)

WIRING CODES
PLUG IN TIMER TERMINAL
QUICK DISCONNECT TERMINAL
SCREW TERMINAL
CONNECTION
NO CONNECTION
MOTOR SWITCH
SPLICE
MOTOR PROTECTOR
CHASSIS (CABINET) GROUND
HARNESS CONNECTOR TERMINAL
INSULATED TERMINAL

TEMPERATURE SWITCH CIRCUIT			
WASH/RINSE	F-H	FF-H	FF-C
HOT/COLD	X	O	O
WARM/WARM (OPT)	O	X	X
COLD/COLD	O	O	X
WARM/COLD	X	O	X

X=CLOSED O=OPEN

NOTES;
1. ALL WIRING MUST CONFORM TO LOCAL ELECTRICAL CODES.
2. CONNECT DRYER TO 30 AMP INDIVIDUAL BRANCH CIRCUIT.
3. DRYER TIMER SHOWN IN OFF POSITION DOOR SWITCH CLOSED, MOTOR AT REST, AN THERMOSTAT CLOSED. AND FABRIC SELECTOR SWITCH AT HIGH HEAT.

WASHER TIMER SHOWN IN ON POSITION TEMPERATURE SELECTOR SWITCH AT HOT WASH/COLD RINSE, AND PRESSURE SWITCH FULL.

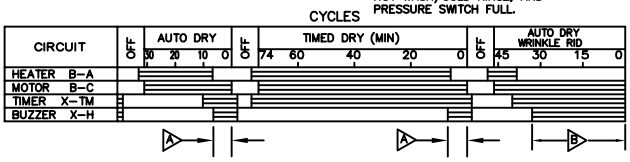

THE BAR CHART ABOVE REPRESENTS ONE COMPLETE REVOLUTION OF TIMER SHAFT.

SHADED PORTION OF BAR CHART INDICATES THE PROPORTIONAL TIMES THAT INTERNAL TIMER CONTACTS ARE CLOSED.

A PULSER CAM, LOCATED NEXT TO THE BUZZER CAM AND ROTATING AT 12 REVELUTIONS PER HOUR, ALLOWS CURCUIT "X-H" TO CLOSE FOR 5 SECONDS (±3 SECONDS)

A 1 OR 2 TIMES IN THIS AREA

B 6 TO 8 TIMES IN THIS AREA

NOTE:
DASHED LINES INDICATE CIRCUITS THAT ARE NOT IN ALL MODELS.

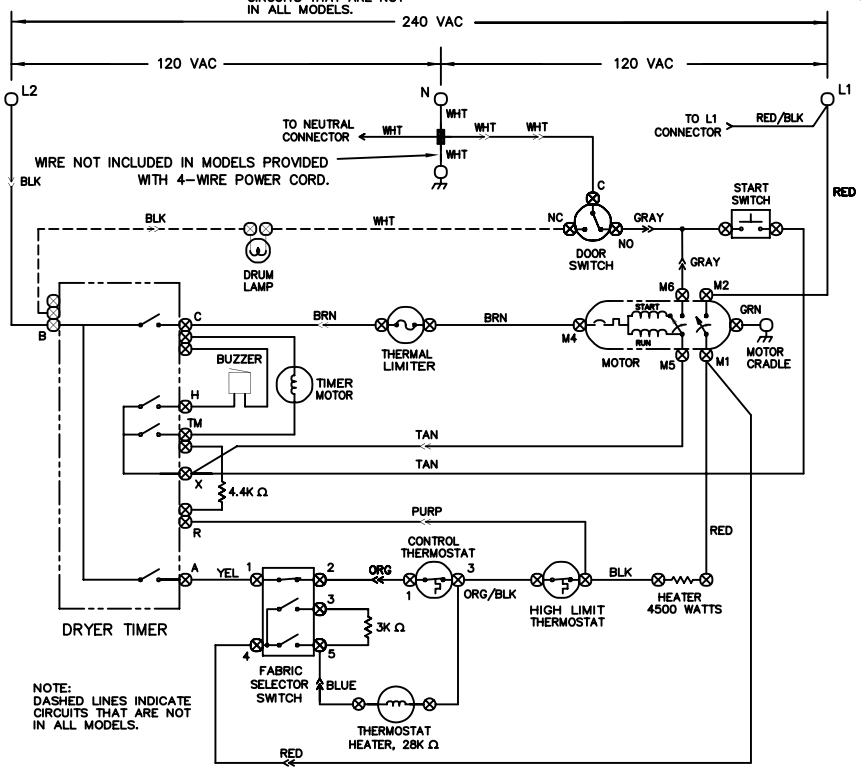

NOTE:
DASHED LINES INDICATE CIRCUITS THAT ARE NOT IN ALL MODELS.

FABRIC SELECTOR SWITCH

POSITION	1-2	3-4	4-5
NO HEAT	O	O	O
LOW HEAT	X	O	X
MEDIUM HEAT	X	X	O
HIGH HEAT	X	O	O

X=CLOSED O= OPEN

E

WIRING DIAGRAM
137061200 A

Downloaded from www.Manualslib.com manuals search engine